SYMETRICS Deck-mounted basin spout with pop-up waste - Platinum

13 713 980 Product version from 4/30/2009

- 165mm projection
- fixed spout
- circular, air-enriched flow
- height of mixer 230 mm
- height up to aerator 205 mm
- hole diameter 35 mm
- 2x screw-in M 10 x 1 pressure hose, leak-tested
- rosette 60 x 60 mm
- max. flow 7 l/min
- lead-free

Only suitable for basins with an overflow.

SYMETRICS Deck-mounted basin spout with pop-up waste - Platinum

13 713 980 Product version from 4/30/2009

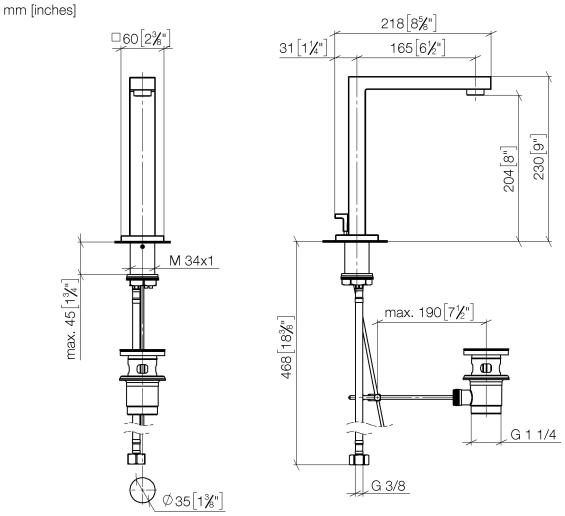

Flow rate chart

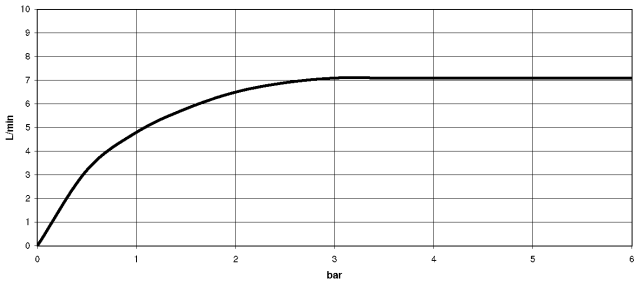

Codes & Standards

DIN 4109	EN 200	ISO 3822	Ü-Zeichen

VA-Zeichen

SYMETRICS Deck-mounted basin spout with pop-up waste - Platinum

13 713 980 Product version from 4/30/2009

Certificates

ETA_18 LGA_18

SYMETRICS Deck-mounted basin spout with pop-up waste - Platinum

13 713 980 Product version from 4/30/2009

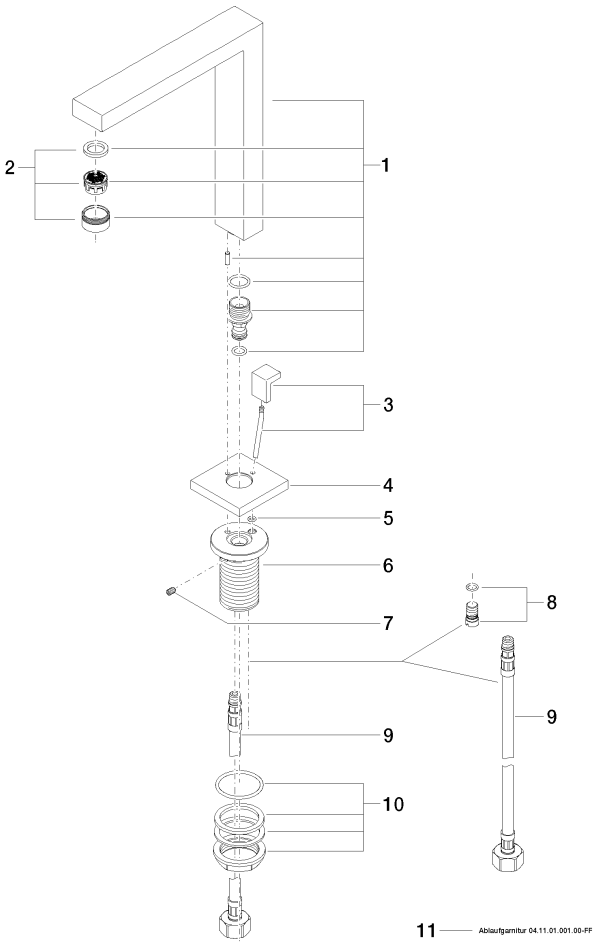

Spare parts list

No.	Item Number	Name	Quantity used	Delivery time
1	90 11 06 192 05-08	spout	1	40
2	90 23 01 029 02-08	aerator	1	40
3	04 31 09 059 00-08	pull-rod	1	40
4	09 27 68 001-08	rosette	1	40
5	09 14 10 166 90	seal	1	2
6	09 30 01 102 10 90	sleeve	1	2
7	09 31 11 036 90	pin	1	2
8	04 31 20 046 10 92	set	1	2
9	04 30 04 019 00 90	hose	2	2
10	04 23 10 044 00 90	fixing set	1	2
11	90 11 01 001 00-08	pop-up waste	1	40

We reserve the right to change designs, product range and technical specifications without prior notice.
More information can be found at: www.dornbracht.com +49 (0) 2371 8899 900 mail@dornbracht.com